DSP Playground

0.2.2 Release Notes

This version corrects the error described in the last version's release notes.

Circuit Schematic:

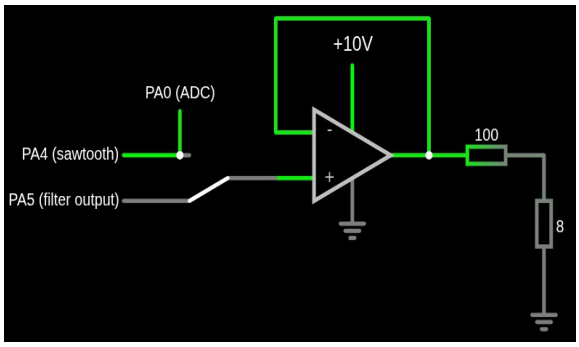

What was done:

Now timer 3 controls the ADC conversion frequency, which is set to 2kHz. There is no synchronization between the sawtooth sampling and the ADC measurements but as this happens 56 times less than that it's not likely that they'll interfere with each other, aka sawtooth updates while an ADC conversion is happening.

The filter model also had to be updated, paying attention to the sampling rate setting:

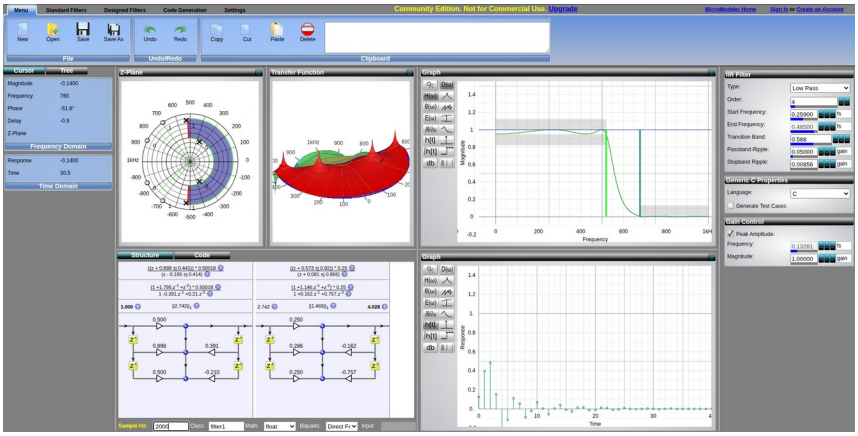

This should kill all the harmonics of the sawtooth signal (multiples of 440Hz) except the fundamental, the 440Hz itself, which should produce an ideally perfect sine wave of this frequency.

Result:

Listening to the result through the speaker reveals that the output is finally some different sound from the input (sawtooth) one.

Sawtooth: Output:

The ADC conversion frequency is 2kHz, therefore the filter calculation too, and thus the output sample rate. That is less than five samples per cycles, which obviously cannot produce a near-perfect sine wave.

I don’t have an oscilloscope right now to measure but according to this Wikipedia article and some other math articles I read, the spectrum should be spikes at k(2kHz) ± 440Hz, $k \in \mathbb{N}$. That is a spike at the fundamental (440Hz) plus pairs of spikes, each 440Hz away from multiples of the sampling frequency (2kHz). So there would be spikes at 440Hz, 1560Hz, 2440Hz, 5560Hz, 6440Hz etc. It makes sense because a set of samples could represent the real frequency, or any frequency greater than half the sampling rate (Nyquist Theorem).

That’s why the sound is still far from a perfect sine wave.